DYNAMIC ANALYSIS IN A REBAR MILL *

Fernando Cesar Sousa[1]
Henrique da Rocha Severino[2]
Renato Nascimento de Castro[3]
Ramon Augusto Moretti[4]
Gabriel Oliveira N. Carletti[5]
Edmilson Ricardo de Oliveira Santos[6]
Rafael Rodrigues Azenha[7]
Marcos Antônio Rodrigues Gomes[8]

Abstract

Rolling stand 12 (LTx) of long steel, installed in the company A, Piracicaba - SP unit, had presented high levels of vibration, which affected its internal components, such as: shaft, gears and bearings, generating downtime. To evaluate this equipment a study was proposed by the following engineering techniques: Conventional Vibration Analysis, Operational Deflection Shape (ODS) and numerical simulation by the Finite Element Method (FEM). In the Conventional Vibration Analysis, high levels of vibration were observed during manufacturing process, especially when the material reaches the equipment. Impacts generate high values in acceleration, on average 80 m/s² peak to peak. In the moment of impact, misalignment of internal components was observed by ODS. Field results were correlated to those obtained by the Finite Element Method, which allowed to calibrate FEM model. Thus, the most effective structural modification already numerically evaluated was implemented in the system. Afterwards, new measurements by vibration and ODS techniques were performed, and attenuation of vibrational levels and operational mode, which overloaded the internal components rolling stand, were verified.

Keywords: Rolling stand, Impacts, Vibration, Operational mode, Simulation.

[1] *Mechanical engineer, Monitoring engineer, Engineering Dynamic Analysis, SKF do Brasil, Cajamar, SP, Brazil.*
[2] *Mechanical engineer, Monitoring engineer, Engineering Dynamic Analysis, SKF do Brasil, Cajamar, SP, Brazil.*
[3] *Mechanical engineer, Simulation engineer, Engineering Dynamic Analysis, SKF do Brasil, Cajamar, SP, Brazil.*
[4] *Electrical engineer, Monitoring engineer, Engineering Dynamic Analysis, SKF do Brasil, Cajamar, SP, Brazil.*
[5] *Mechanical engineer, assistant engineer, Engineering Dynamic Analysis, SKF do Brasil, Cajamar, SP, Brazil.*
[6] *PHD Mechanical engineer, Simulation engineer, Engineering Dynamic Analysis, SKF do Brasil, Cajamar, SP, Brazil.*
[7] *Mechanical engineer, Mechanical engineer, Maintenance, ArcelorMittal, Piracicaba, SP, Brasil.*
[8] *Operation engineer, business consult, sales, SKF do Brasil, Cajamar, SP, Brazil.*

** Technical contribution to the 11th International Rolling Conference, part of the ABM Week 2019, October 1st-3rd, 2019, São Paulo, SP, Brazil.*

1 INTRODUCTION

The drive of rebar mill chair 12, have presented high vibrational levels, also failures of the bearings and gear of the gearbox. Thus, to evaluate and identify causes of the problem, a Dynamic Analysis study of this system was carried out. For that, the following engineering solutions were used: Conventional Vibration Analysis, Operating Deflection Shape (ODS) technique and numerical simulation using the Finite Element Method (FEM). Conventional Vibration Analysis was used to determine operational frequencies and its vibration levels, and later used in the evaluation by ODS analysis. ODS technique allowed the verification of system dynamic responses, and consequently regions with irregular movements. For solutions proposal, Finite Element Method was used, which enabled dynamic calculations, whose results were the natural frequencies and their respective modes of vibration. Therefore, the association of these techniques allowed the root cause identification of high levels of vibration, as well as the elimination of equipment operation resonant conditions.

2 MATERIAL AND METHODS

Rebar mill 12 is part of equipment set composed by 13 units, which are used for lamination process of steel. The product from this plant is long steel, which is manufactured from scrap metal. To solve problems in this chair, dynamic behavior was evaluated by following techniques: Conventional Vibration Analysis, Operating Deflection Shape (ODS) and Finite Element Method.

2.1 Conventional Vibration Analysis

Excessive vibration problems, around 90%, were diagnosed by Conventional Vibration Analysis. For example: unbalanced rotor, misalignment, damaged bearings presented immediate solutions. However, untypical problems such as resonance or cracks in structure, are more complicated to solve. Commonly, solutions to these types of problems are reached from trial and error [1], being time-consuming, less cost effective and not meeting the goal: trouble-free operating condition. In order to be successful in solving problems due to resonance, a thorough study must be carried out in the system. Therefore, numerical methods are correlated with experimental techniques, such as: Conventional Vibration Analysis and the Operational Deflection Form. Thus, solutions become more robust, less occurrence repetition, and reduction of non-maintenance schedules.

2.2 Operating Deflection Shape (ODS)

Operating Deflection Shape (ODS) is used in the experimental identification of operating modes or forms of structure. vibration. Operational modes can be identified from a set of measured data simultaneously or through a set of data, taking fixed reference measures and other movement measures of structure points.
Measurements are made at attachment points, bearings, metal bases and equipment casing, and can be in: acceleration, speed or displacement. Application of reference answers is widely used in ODS and involves Transmissibility functions use. Transmissibility is the ratio in the frequency domain between two response signals [2]. The transmissibility function is represented by Equation 1:

$$T_{ij}(\omega) = \frac{X_i(\omega)}{X_j(\omega)} \qquad (1)$$

where T_{ij} is the transmissibility function between the spectral response X_i and reference spectral response X_j. Transmissibilities are obtained experimentally by measuring the responses at different points and directions

of interest of the structure divided by the reference response of the same point held fixed in all measurements. Being a response signal from a point *i* and a response signal from a reference point *j* (Equation 2):

$$T_{ij}(\omega) = \frac{Si_j(\omega)}{S_{jj}(\omega)} \qquad (2)$$

where S_{ij} is the cross-spectral density between the response and reference signal, S_{jj} is the auto-spectral density of the reference signal. The phase is preserved by the cross-spectral density of both measured signals. From Equation 2 it is possible to verify that the transmissibility does not depend on the knowledge of the excitation force. This is one of the advantages of using transmissibility in the identification of operational modes, because in operational situations it is not always possible to measure the excitation force [2].

2.3 - Finite Element Method -FEM

FEM provides a mathematically detailed description of the mechanical system, which is suitable for the study of structural modifications [3].
Consider a volume element V bounded by a surface S with the tensile vector on the surface S. The finite element formulation starts from the variational principle related to the total potential energy as Equation 3:

$$\boldsymbol{\pi} = \int_V \boldsymbol{\sigma}^T \boldsymbol{\varepsilon} dV - \int_S \boldsymbol{u}^T \bar{\boldsymbol{t}} dS = \boldsymbol{0} \qquad (3)$$

where σ, ε, and *u* is the vector of strain, strain and displacement, respectively. The first-order variation of Equation 3 can be written as follows (Equation 4):

$$\boldsymbol{\delta\pi} = \int_V \boldsymbol{\sigma}^T \boldsymbol{\delta\varepsilon} dV - \int_S \boldsymbol{\delta u}^T \bar{\boldsymbol{t}} dS = \boldsymbol{0} \qquad (4)$$

Using the constitutive equation and the relation between deformation and displacement, $\boldsymbol{\varepsilon} = \boldsymbol{Bu}$ (Equation 5) is written as:

$$\boldsymbol{\delta u}^T = \left[\int_V \boldsymbol{B}^T \boldsymbol{D} \boldsymbol{B} dV\right] - \boldsymbol{u} - \boldsymbol{\delta u}^T \int_S \boldsymbol{N} \bar{\boldsymbol{t}} dS = \boldsymbol{0} \qquad (5)$$

where *N* is the matrix of the form functions. Equation 6 is the basic equation for finite element discretization and can be converted to algebraic equations:

$$\boldsymbol{Ku} = \boldsymbol{f} \qquad (6)$$

where *K* is the elementary stiffness matrix, *f* and *u* are charge and displacement vectors, respectively. Consider that (Equation 6) is a static case when load does not change over time, ie the application period is sufficiently long, and accelerations developed by the structure are low enough to be neglected. When the loading frequency is not high, in the sense that it is of the same order, or only a few times larger than the first natural frequency of the system, the problem is said of structural dynamics. The same can be done numerically by solving a problem of eigenvalue (natural frequencies) and eigenvector (vibrating modes) by FEM [3]. For example, in a design situation, it is often of interest that the charging frequency falls below the first natural frequency, or at least it is important to avoid that excitation frequency is close to one of the system natural frequencies.

3 RESULTS AND DISCUSSION

3.1. Vibration and ODS Analysis

Conventional vibration analysis was performed at the same measurement points as ODS technique. Figure 1a and 1b show points where FFT measurements were made on the drive components of chair 12.

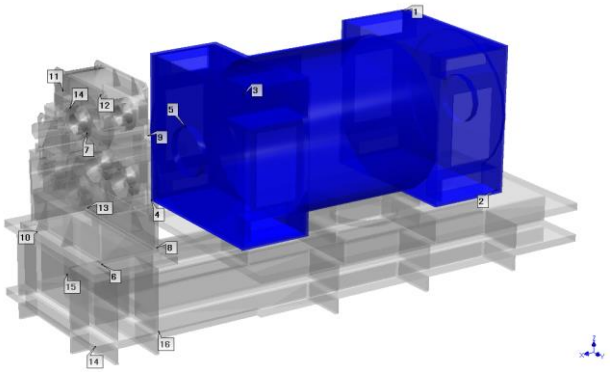

(a)

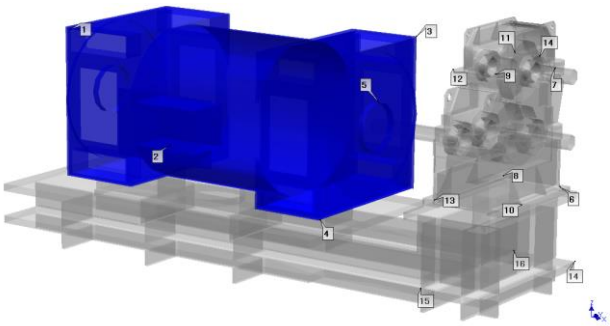

(b)

Figure 1. (a-b): Measuring points.

In Tables 1 to 3, instrumentation, software, motor technical data of gearbox is described. Such information is relative to operation conditions used during vibration and ODS measurements.

Table 1. Motor data

Equipment:	Motor
Power:	400 kW
Rotation:	14,17 to 25 Hz (850/1500 RPM)

Table 2. Instrumentation and software used in the measurement of Vibration and ODS Analysis, as well as, in the Numerical Simulation

Collector/Analyzer (SKF):	SKF IMX-P
Sensors (SKF):	Accelerometers CMSS2200
Analysis/Management Software:	@ptitude Observer 8.0.168.0
3D CAD Software:	Creo Parametric 2.0
ODS and FEM:	Dynamic Analysis, ANSYS® R1 2019

Table 3. Gearbox data

Gearbox Model:	PTI SEND 250/320
Power:	550 kW
Rotation - Input Shaft:	12,48 Hz (749,16 RPM)
Gear Ratio	1:2,688
Number of teeth of the pinion - Z1	16
Number of teeth of the pinion - Z2:	43
Number of teeth of the pinion - Z3:	34
Number of teeth of the pinion - Z4:	34
GMF1:	240 Hz (900 RPM)
GMF2:	189,8 Hz (900 RPM)
Rotation - Shaft 1:	15 Hz (900 RPM)
Rotation – Output Shaft:	5,8 Hz (900 RPM)

GMF: Gear Mesh Frequency

Measurement were performed to following input rotation: 850 to 1500 RPM and output shaft: 314 to 550 RPM. Gear information data were calculated using gear ratio and frequencies observed in the velocity vibration spectra and transmissibility measurements were performed using the following set up: 100 mV/EU; 3200 lines, frequency range: 0 to 1 kHz, Hanning window and operational condition was high load. Vibration signals measured in drive components of the chair 12 have low vibration amplitudes, as observed in Figure 2. Also, it was noted that for a higher rotation, vibration levels are also higher, especially in the motor and the gear unit (point 11X - axial).

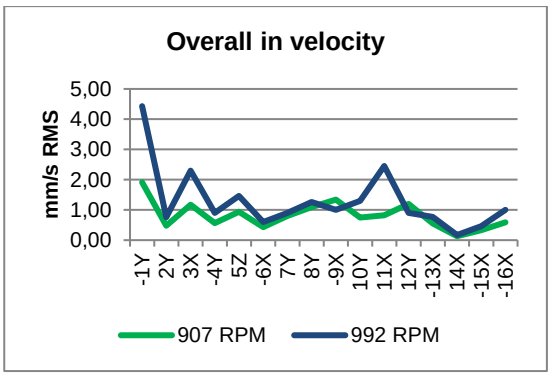

Figure 2. Vibration levels measured in the chair 12.

Vibration spectrum measured at point 1X (16,25 Hz) shows the frequency of 2XRPM (33,5 Hz) characterizing misalignment between electrical motor and gearbox [4] (Figure 3).

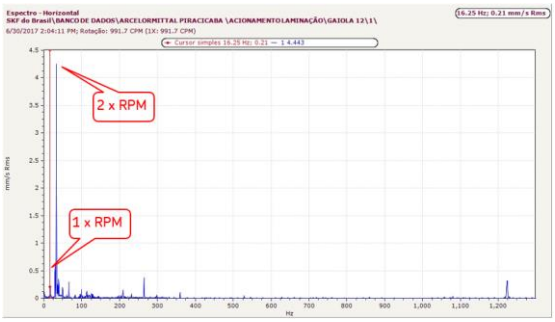

Figure 3. Spectrum characterizing misalignment.

In the gearbox was observed in the axial direction (X) the meshing frequency (GMF1) and harmonics. The frequency of 2XGMF1 appears with amplitude greater than GMF1, characterizing misalignment between gears [5], according to Figure 4.

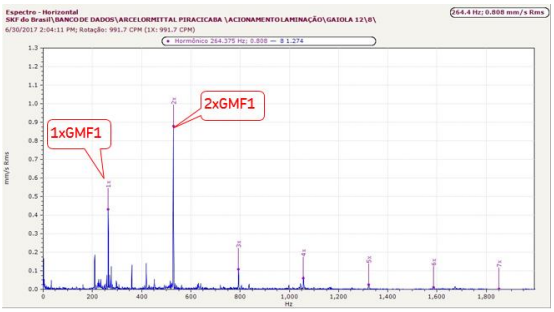

Figure 4. Spectrum characterizing gear misalignment.

The system under study operates on transient conditions, located in the beginning of the rolling process, impacting the entrance of the rebar in the chair, generating high levels of vibration. During the occurrence of shocks, global levels [g peak to peak] were obtained, as well as, signal time of acceleration. These data are presented in Figure 5a and 5b, respectively. Also, it was observed that the highest vibration levels that quantify the shock occur on the top of the gearbox.

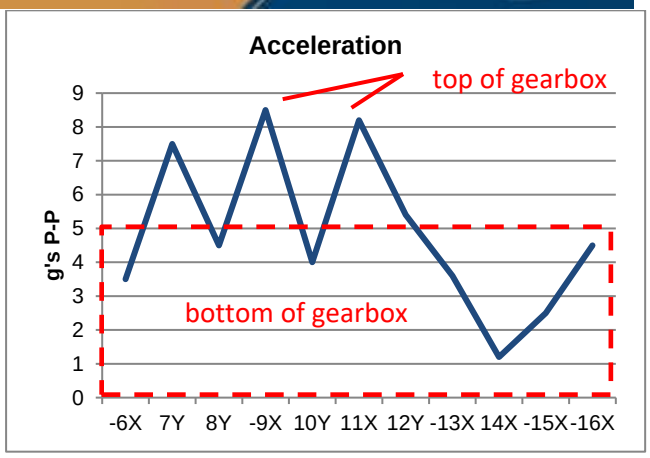

(a)

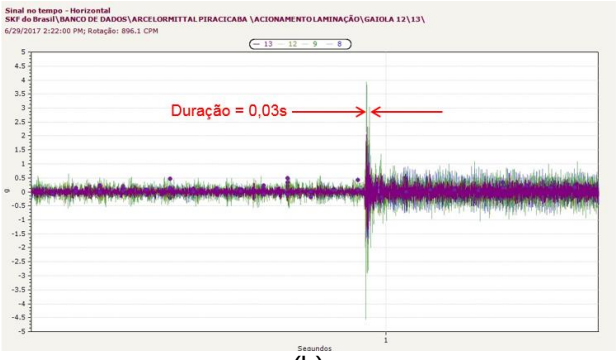

(b)

Figure 5. (a): Global levels and (b): signal time of acceleration.

Operating mode in 15 Hz (motor rotation) and 30 Hz (2 x motor rotation), presented characteristic movements of misalignment between motor and gearbox, as observed in the vibration spectra. The characteristic of the misalignment between motor and gearbox can be of static or dynamic origin, (Figure 6a to 6d).

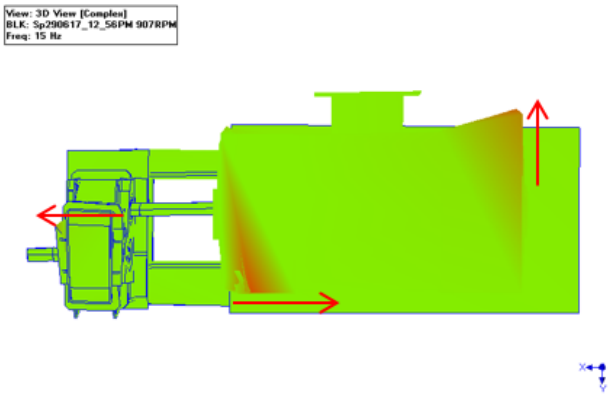

(a)

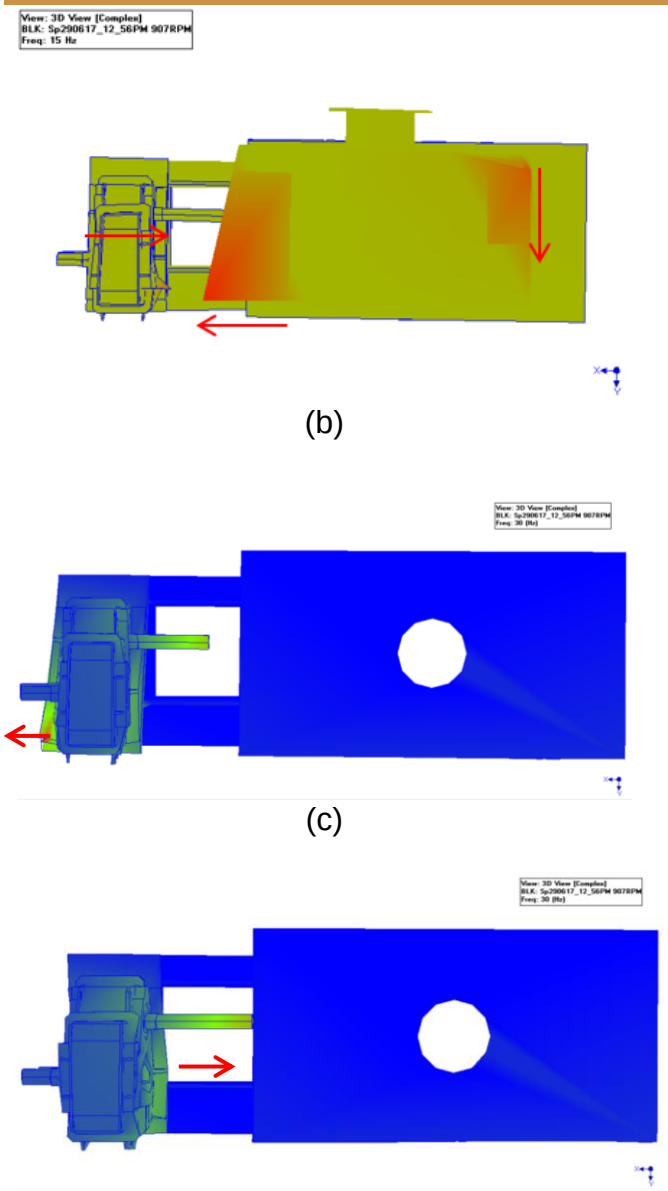

Figure 6. (a -b): operational mode in 15 Hz and (c-d): in 30 Hz.

Shocks generated during the entrance of the rebar in the chair, cause a strong displacement in the gearbox structure. As observed in Conventional Vibration Analysis, displacement are predominantly in the axial direction of the gear unit, as shown in Figure 7a and 7b.

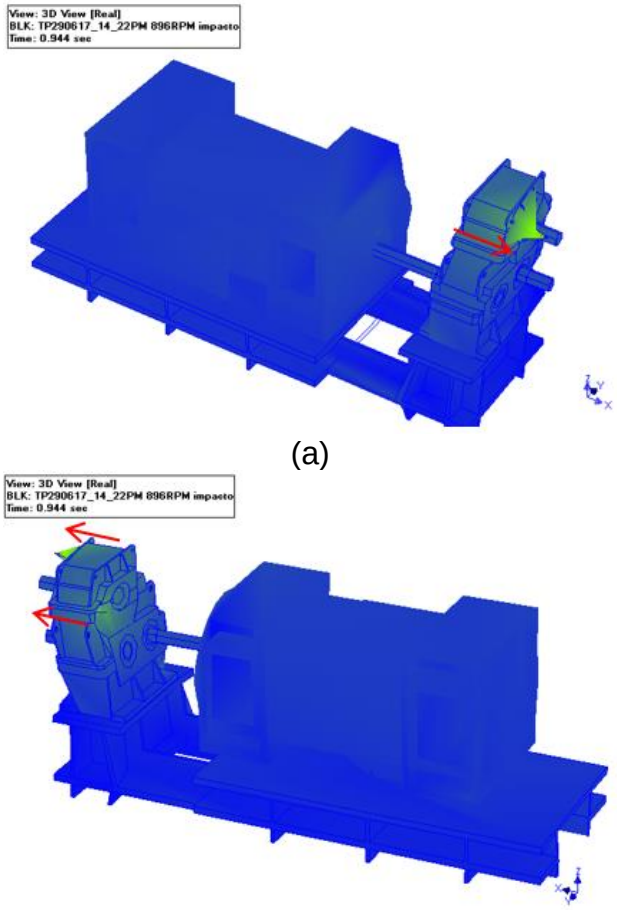

Figure 7. (a-b): Operational mode during impact (time domain).

3.2. Numerical Simulation of Rebar Mill System by Finite Element Analysis – FEM

Objectives of the numerical simulation analysis were to determine the natural frequencies and modes of the metallic base and the rolling chair 12 structure, and thus theoretically confirm the existence of possible natural modes. For the assembly of real structure representative geometry, Creo Parametric 2.0 computer program was used (Figure 8). Geometry was exported to the numerical simulation program. Then masses, material, and boundary conditions were defined.

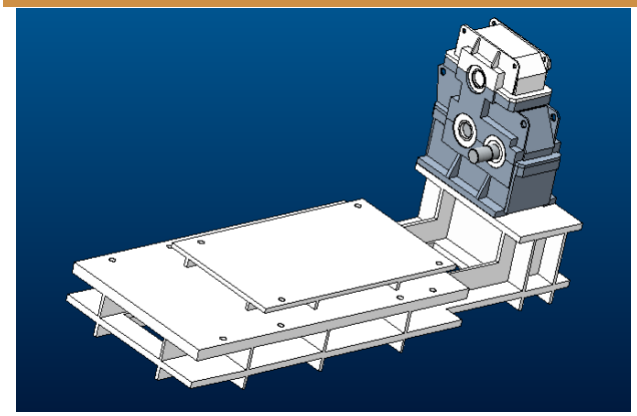

Figure 8. Geometry of the assembly (gearbox and metal base).

For the modeling of this system, SAE 1020 material was considered, and the mechanical properties are described in Table 4.

Table 4. Mechanical properties of SAE 1020 steel [6]

Young's Modulus (MPa):	2,00e+5
Poisson ratio:	0,3
Density (kg/m³):	7870
Yield Strength (MPa):	295
Tensile Strength (MPa):	395

To perform system Modal Analysis, following boundary conditions were applied:

- Metal base ixed support;
- Application of electrical motor mass.

These boundary conditions are shown in Figure 9.

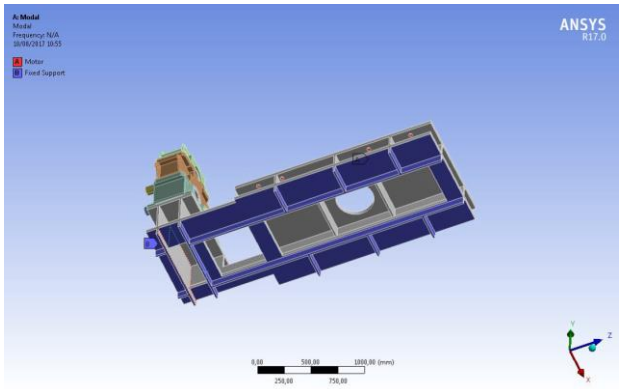

Figure 9. Boundary conditions applied in the model.

Based on the discretized model, system modal analysis was performed with the calculation of the first fifteen natural modes, whose natural frequencies are presented in Table 5.

Table 5. Natural frequencies referring to the first fifteen vibration modes of the metal base - gearbox assembly

Mode	Frequency [Hz]
1	44,37
2	61,23
3	78,12
4	124,18
5	206,64
6	345,78
7	444,96
8	495,85
9	549,61
10	557,45
11	588,36
12	645,19
13	656,21
14	666,19
15	699,90

For results obtained from Numerical Modal Analysis it was verified that there are no frequencies and modes of vibration in the region of 15 Hz and 30 Hz. Therefore, the dynamic behavior of the chair is not related to resonance.

From the Vibration Analysis it was verified that the spectra presented characteristic of misalignment between motor and gearbox, between gears, as well as impacts resulting from material entering the lamination chair. Also, it was observed that the Operational Deflection Form presents a dynamic behavior that causes misalignment between gearbox and motor, as well as between gears due to structural bending. Therefore, a Harmonic Analysis was performed to evaluate the behavior of the set (gearbox/base metal) as a function of the acceleration response obtained in the field measurements in the region of the gearbox. Figure 10 shows boundary conditions used to perform Harmonic Analysis.

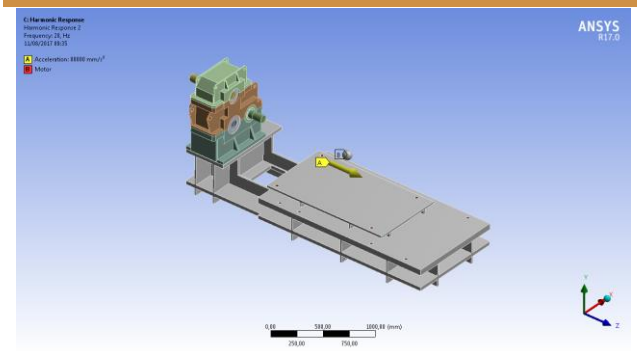

(a)

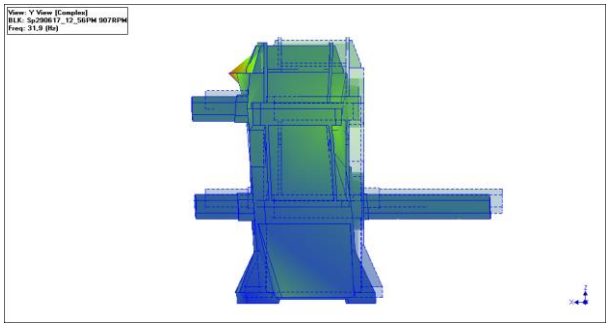

(b)

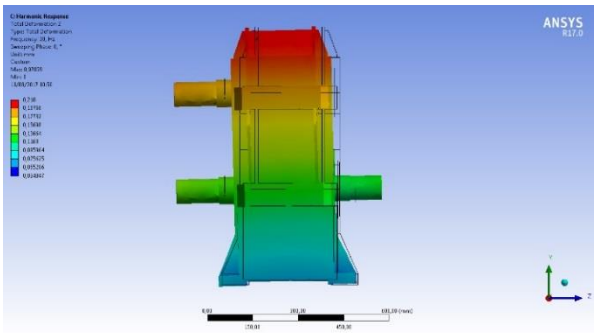

(c)

Figure 10. (a): Boundary condition applied to Harmonic Analysis (b): Operational mode obtained by ODS and (c): Displacement obtained by Harmonic Analysis.

To correct the problem of low stiffness, it was evaluated proposal structural modifications, which are indicated in red, as shows Figure 11a to 11c.

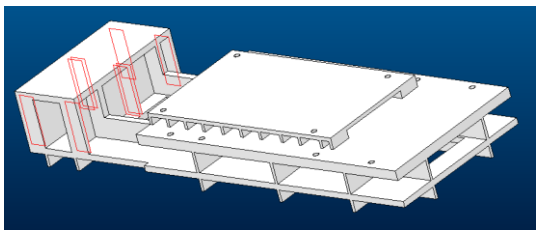

(a)

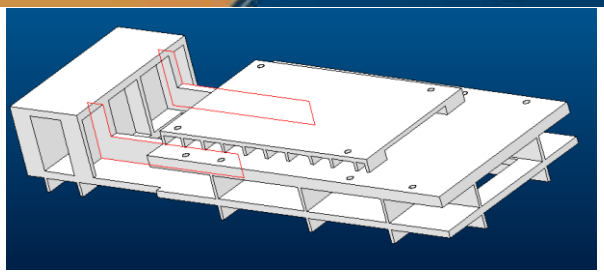

(b)

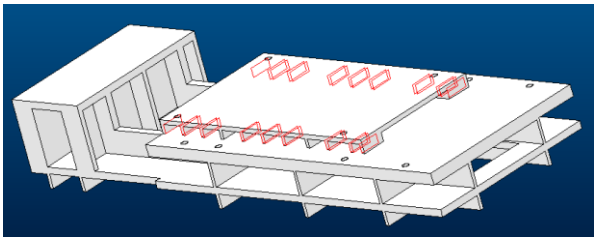

(c)

Figure 11. (a-c): proposal structural modifications.

Observed displacements (Table 6) in the current and in the structural modification condition (Figure 12).

Table 6. Displacements and % reduction

Region	Original [mm]	Modified [mm]	%
Gearbox	0,218	0,140	-35
Base	0,978	0,138	-86

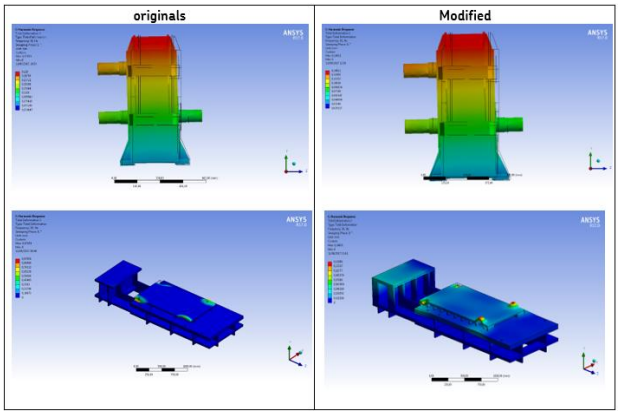

Figure 12. Displacements current and in the structural modification condition

After modifying the system, vibration values measured in drive components of the chair have low amplitudes of vibration, as presented in Figure 13, which shows overall levels of vibrations before and after the structural modification.

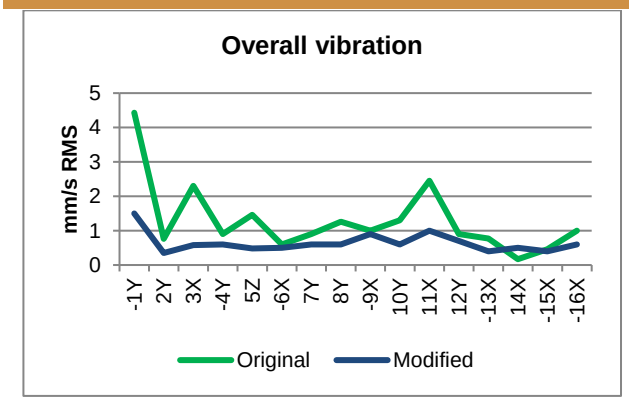

Figure 13. Overall vibration before and after modification

Vibration data and ODS (Operational mode in 1X RPM) also showed better conditions after modifications implemented in the structure. Figure 14a shows vibrational level energy in 30 Hz before application of structural modifications, and after there is reduction of the energy in this frequency (Figure 14b). Figure 15a shows dynamic behavior of the operational mode in 30 Hz before application of structural modifications, and therefore displacement of the gearbox frame was observed when occur impact of material in the chair. Figure 15b highlight the dynamic behavior in 30 Hz, after application of structural modification. In this condition, equipment present stable behavior.

(a)

(b)

Figure 14. (a): Spectrum before of modifications and (b): after

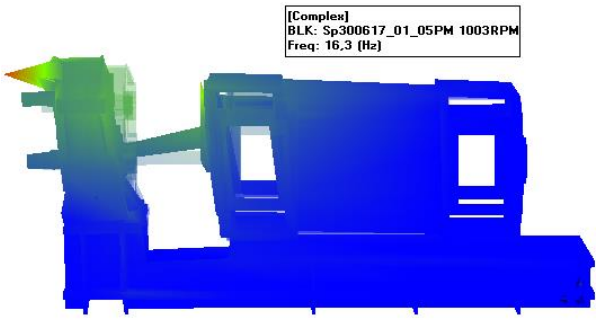

(a)

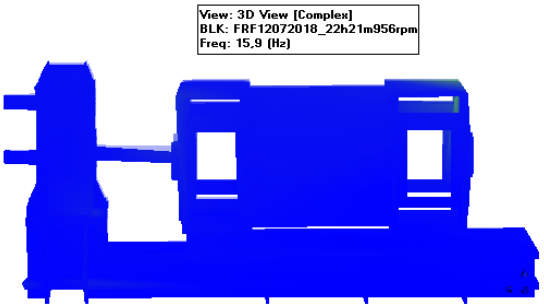

(b)

Figure 15. (a)**:** ODS before in 16.3 Hz and (b): 15.9 Hz and after of the modifications

4 CONCLUSION

The system presented high values of vibration due to impact of material in the chair, and consequently misalignment. Such events cause failures in the internal components of gearbox (gears and bearings). After the implementation of the structural modifications, vibration energy level was reduced according to vibration

spectrum, and therefore rebar mill is operating with reliability.

REFERENCES

1 Onari, M. M., Boyadjis, P.A., Solving Structural Vibration Problems Using Operating Deflection Shape and Finite Element Analysis, Proceedings of the Twenty-Fifth International Pump Users Symposium, 2009, pages 85 to 102;

2 Gevinski, J. R., "Determinação da Deformação Dinâmica em Superfícies Utilizando Parâmetros Vibracionais", UNICAMP, pp. 1-258, maio de 2014;

3 Zienkiewicz, O. C. The Finite Element Method. 3rd ed. McGraw-Hill, 1977;

4 Technical Associates of Charlotte, "Use of Vibration Signature Analysis to Diagnose Machine Problems", 1997, chapter 6;

5 Jones, R. M., "Guide to the Interpretation of Vibration Frequency and Time Spectrums", SKF @ptitude Exchange - Reliability Systems, San Diego, CA, US, 118 pp., Sept 2011.

6 Ansys® Workbench 2019 – R1, Banco de dados de materiais, 2018.